Model HP457D CORDLESS HAMMER DRIVER DRILL

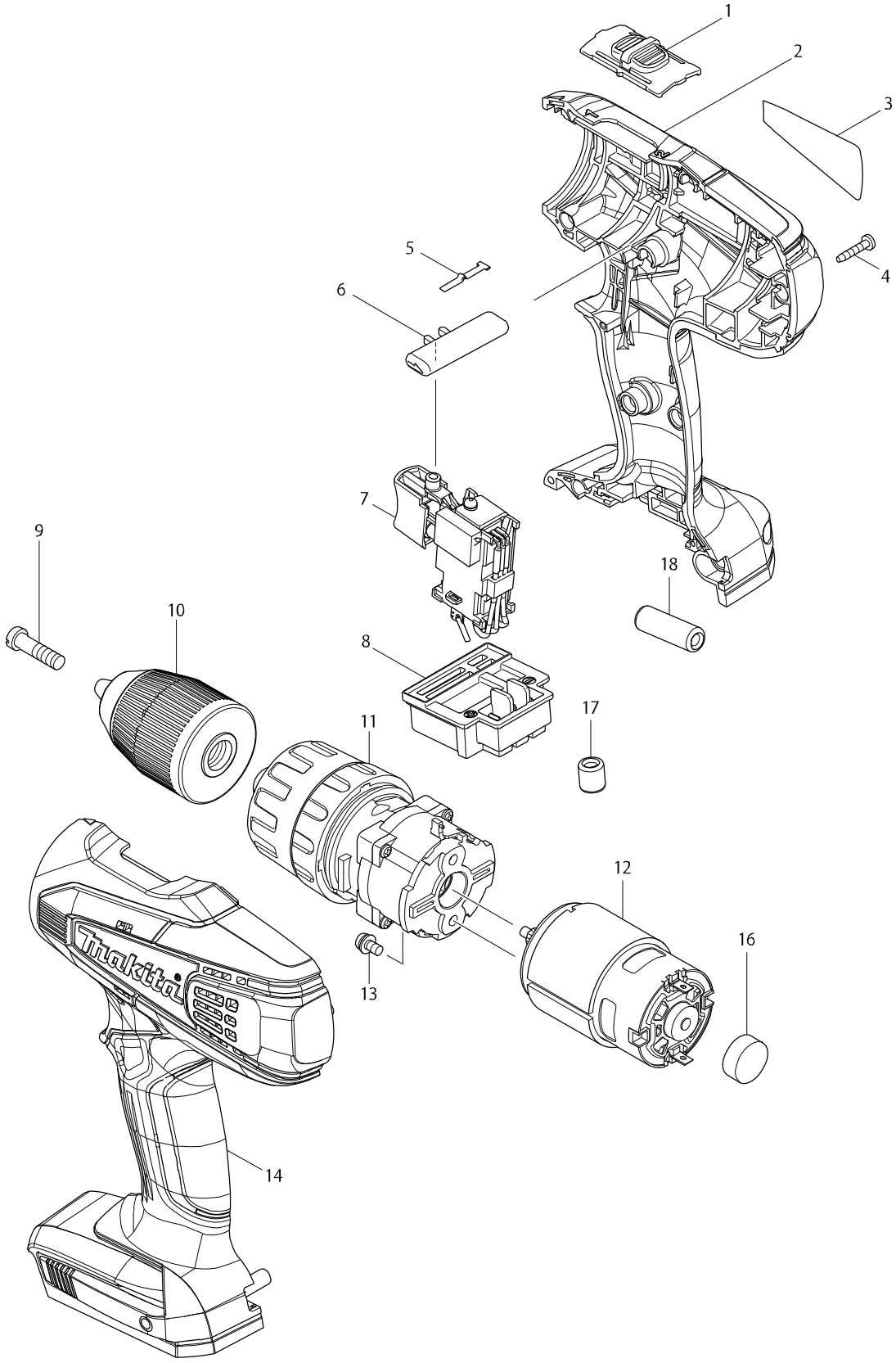

PDF created with pdfFactory trial version www.pdffactory.com

Model HP457D CORDLESS HAMMER DRIVER DRILL

Položka	Objednávacie	Popis	I/C	ks	N/O	Predaj	Nákup	Poznámka
001	125310-5	PREPÍNAČ		1				
C10	231433-0	PRUŽINA PRÍTLAČNÁ 4		2				
002	187026-0	HOUSING SET		1				
D10		INC. 14						
003	869392-4	HP457D NAME PLATE		1				
004	266429-2	SKRUTKA 3X16MM		9				
005	232182-2	PERO LISTOVÉ		1				
006	452399-3	F/R CHANGE LEVER		1				
007	638862-2	SWITCH UNIT		1				
D10		INC. 17,18						
008	643862-9	TERMINAL		1				
009	251468-5	SKRUTKA M6x22 6261D		1				
010A	766004-9	SKĽUČOVADLO SSBF 13mm 6391/839		1	*			
010-1A	766004-9	SKĽUČOVADLO SSBF 13mm 6391/839	O	1				
010-1D	766004-9	SKĽUČOVADLO SSBF 13mm 6391/839		1				
011	125485-0	PREVODOVKA KPL.8391D		1				
012A	629834-8	MOTOR 18V 6390/8390		1	*			
012-1A	629937-8	DC MOTOR 18V 6390/91/8390DWAE	O	1				
012-1D	629937-8	DC MOTOR 18V 6390/91/8390DWAE		1				
013	911108-4	SKRUTKA M4x8		2				
014	187026-0	HOUSING SET		1				
D10		INC. 2						
016	421940-3	KRYTKA 8390D/8391DWAE/DWALE		1				
017	688164-6	LINE FILTER		1				
018	688165-4	LINE FILTER		1				
A01A	784636-0	BIT NR 2-65 MM 1/4"		1				
A01D	D-52299	74PCS. BIT SET, MM, TYPE MZ		1				
A02	***DC18WA	DC18WA BATTRY CHARGER		1				
A03A	195454-5	BATTERY BL1811G SET		2	*			
A03-1A	196367-3	BATTERY BL1813G SET	O	2	*			
A03-2A	196367-3	BATTERY BL1813G SET	O	2				
A03-2D	196367-3	BATTERY BL1813G SET		2				
A04	452652-7	BATTERY COVER		1				
A05A	824981-2	PLASTIC CARRYING CASE		1				
C10	162315-4	LATCH		2				
C20	452137-3	HANDLE		1				
A05D	821632-8	PLASTIC CASE		1				
C10	455522-9	SLIDE LATCH		2				
C20	452143-8	SHAFT		2				
A06A	892779-5	HP457DWE PLASTIC CASE LABEL		2				

PDF created with pdfFactory trial version www.pdffactory.com