DE	GERMANY

Diagram / Parts List

DML185

RECHARGEABLE FLASHLIGHT

2021/01

(DE) DML185 / RECHARGEABLE FLASHLIGHT

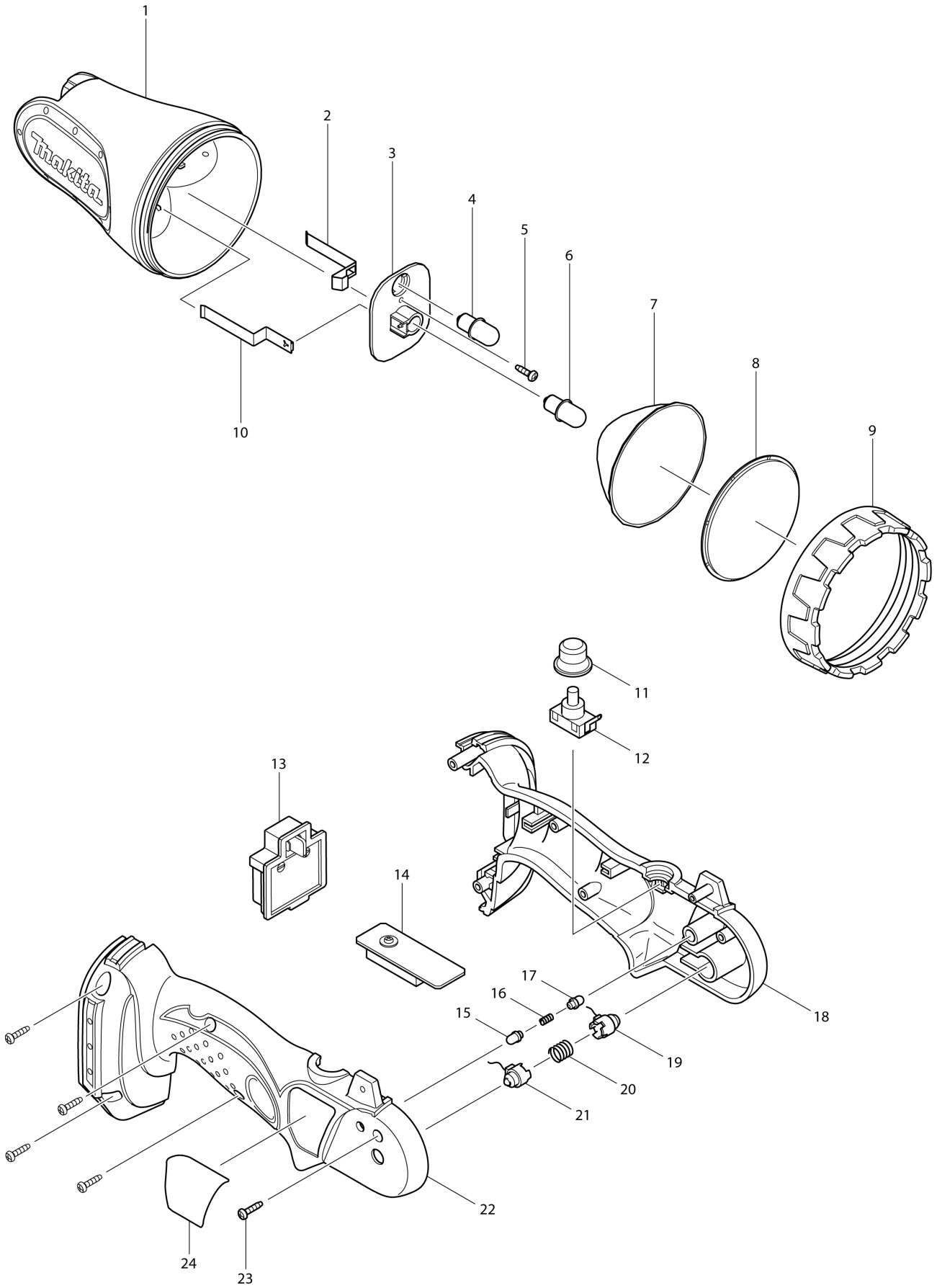

DE	GERMANY

DML185 / RECHARGEABLE FLASHLIGHT

Item	Sub	Parts No.	Parts Description	Qty	I/C	E/C No.	Close No.	Remark
001		GM00001003	CASE HEAD 30105185104	1				
002		GM00001010	BULB CONTACT PLATE-21201185002	1				
003		GM00001002	PROTECTOR(CONTACT)32009120012	1				
004		A-90261	BULB SET	1			Y04877	
004-1		A-30542	BULB SET	1	<	Y04877		
005		GM00001012	SCREW 3X12 PB BLACK ZN	1				
006		A-90261	BULB SET	1			Y04877	
006-1		A-30542	BULB SET	1	<	Y04877		
007		GM00000130	REFLECTOR	1				
008		GM00000070	LENS	1				
009		GM00001001	REFLECTOR RETAINER 30110185003	1				
010		GM00001009	BULB CONTACT PLATE (+)	1				
011		GM00001006	RUBBER COVER 39010185004	1				
012		GM00000200	SWITCH	1				
013		GM00001055	BATTERY HOLDER (C2010185006)	1			82365	
013-1		GM00001116	BATTERY HOLDER (C2004185006)	1	O	82365		
014		GM00001011	CIRCUIT BOARD G0314500101	1			Y04701	
014-1		GM00001029	CIRCUIT BOARD G0318500100	1	<	Y04701		
015		GM00001005	KNOCK SHAFT 31011120009	1				
016		GM00000090	COMPRESSION SPRING 4	1				
017		GM00001005	KNOCK SHAFT 31011120009	1				
018		GM00001000	HOUSING SET	1				
	D10		INC. 22					
019		632524-4	PIVOT TERMINAL UNIT R	1			Y04798	
019-1		GM00001004	LEFT CASE SHAFT 3101012003	1	X	Y04798		
020		233144-3	COMPRESSION SPRING 7	1				
021		GM00001004	LEFT CASE SHAFT 3101012003	1			Y04798	
021-1		632524-4	PIVOT TERMINAL UNIT R	1	X	Y04798		
022		GM00001000	HOUSING SET	1				
	D10		INC. 18					
023		GM00001013	SCREW 3X14 PB BLACK ZN	5				
024		GM00001008	NAME PLATE	1			Y07130	
024-1		GM00001453	NAME PLATE D0111850100	1	X	Y07130		
025		812V28-6	CAUTION LABEL	1		C3534		

Interchange
O : Yes
X : No
< : the new part can be substituted for the current.
> : the current part can be substituted for the new.
S : Interchangeable as a set.